Loan Container Incoming Inspection

VADER® Pedicle System/VADER®one Pedicle System
(MIS approach)

Overview Instrumentation

VADER® Pedicle System MIS 1/2

42-853-1

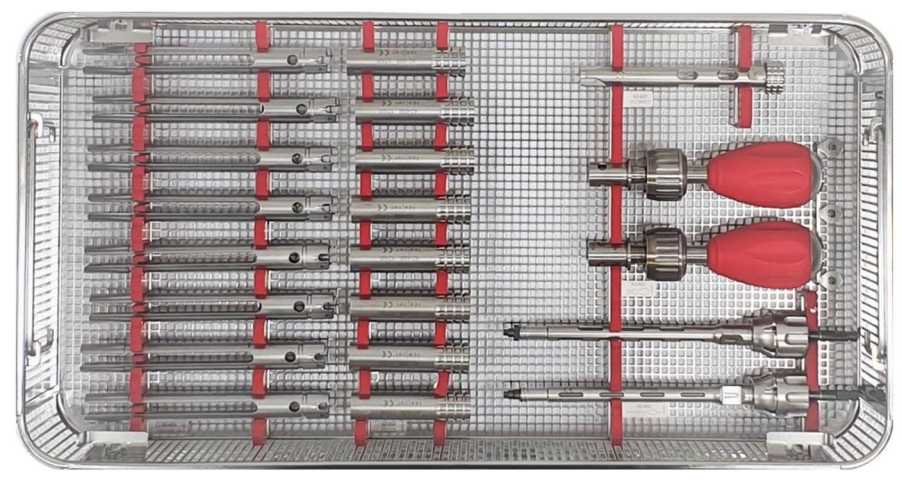

42-853-3

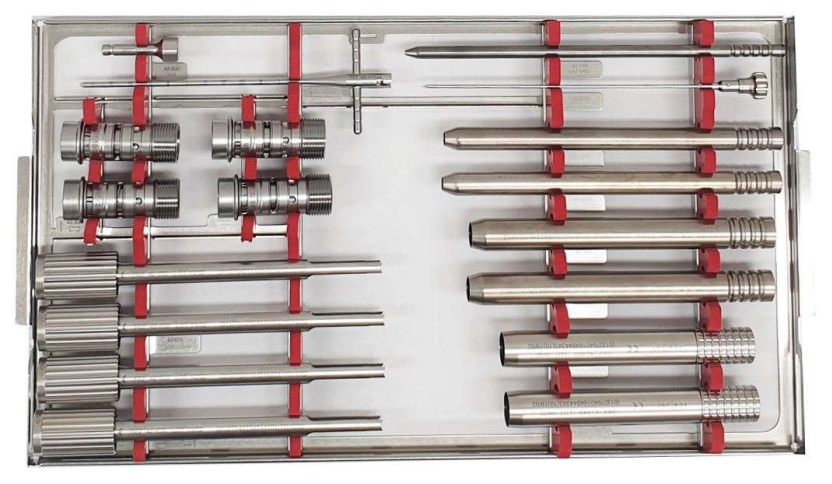

VADER® Pedicle System MIS 2/2

42-863-1

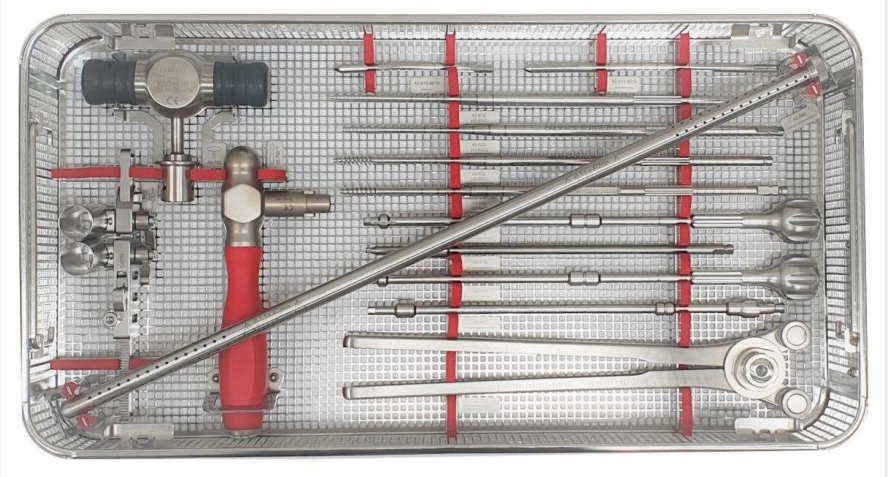

42-863-3

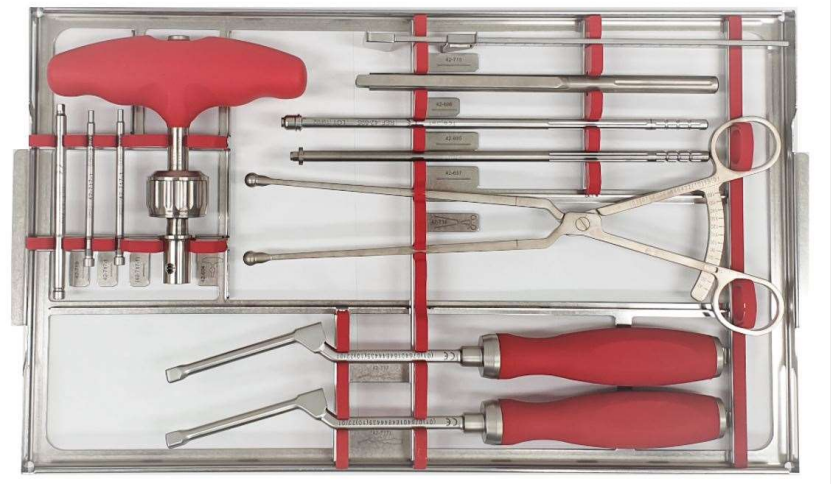

Overview Inspection Aids

- **Screw Ø 5.5 × 45 mm (H286)**
- **Nut Screw (H287)**
- **Rod Curved Ø 6.0 (H288)**
- **K-Wire, Threaded Ø 1.6 (H289)**
- **K-Wire, Blunt Tip Ø 1.1 (H293)**

General Control

- **Do the contents of the container correspond to the kit profile?**
- **Are the instruments intact (not clearly damaged)?**
- **Is the laser marking legible/the data matrix code visible?**
  - Instruments where the laser marking is no longer legible must be replaced.
  - Instruments where the data matrix code (UDI) is no longer visible must be replaced. (When available, a scanner can be used to check the data matrix code.)

- **Movable parts/joints – maintenance using surgical instrument oil!**

  → **Functional inspections for instruments** (see following pages)

- **If an instrument is replaced, all tests involving this instrument have to be repeated.**
- **Instructions for Reprocessing: 0241US, 0252US**

Functional Inspection

- **Pedicle Access Needle (42-515) and Pedicle Access Needle wire (42-516)**
  - Check tips
  - Check whether cannulation is free
  - Functional inspection (insert wire in access needle)

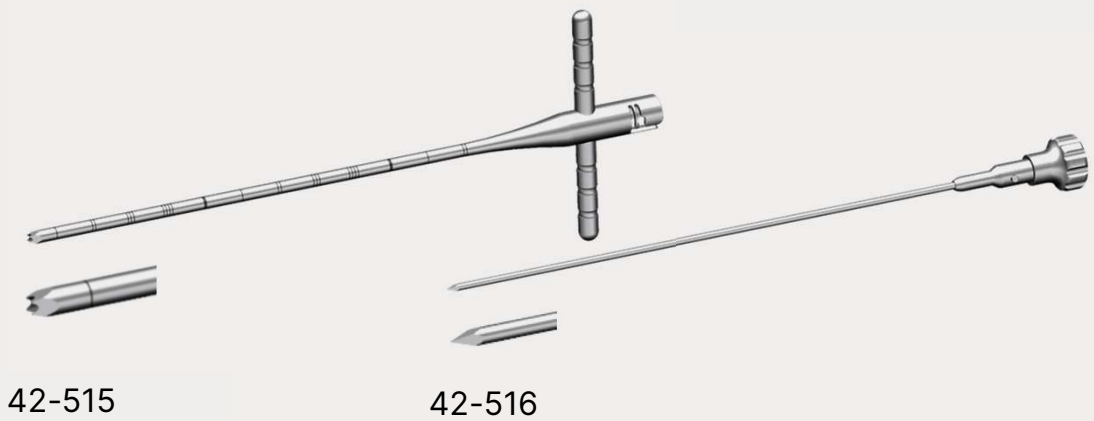

- **Dilators (42-646, 42-647, 42-648, 42-649)**
  - ALL dilators can easily be slid over the next smaller one

Functional Inspection

- **Reduction Cap for Persuader MIS (42-831) and Tubes (42-653)**
  - Moving parts/joints – maintenance using surgical instrument oil!
  - ALL reduction caps for persuader MIS can be placed on ALL tubes in 2 positions (rotated by 180°) by pulling the outer sleeve back onto the tube (42-653) – audible “click”
  - After final placement onto tubes, pull on the tube and the thread of the reduction cap without touching the outer sleeve of the reduction cap
    - If the reduction cap comes off the tube, functional testing has not been successful
    - If reduction cap stays connected to the tube, functional testing has been successful
  - Pull back the outer sleeve of reduction cap; after releasing, the outer sleeve should snap back, and the distance of all laser markings should be 5mm
    - If distance is less than 5mm, functional testing has not been successful

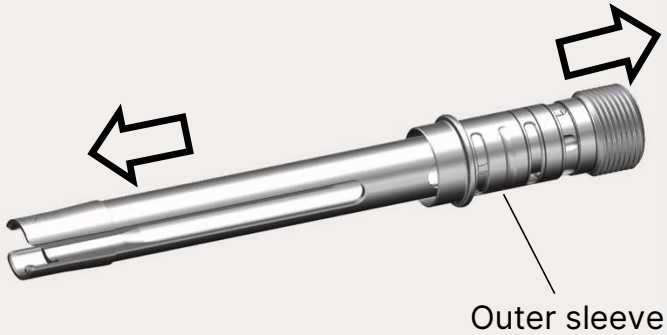

Functional Inspection

- **Persuader MIS (42-830)**
  - ALL persuaders MIS can be inserted into the reduction cap for persuader MIS, until the edge of the persuader MIS is at the lowest laser marking line
  - The adaptor for persuader MIS (42-832) fits into the persuader

- **ALL Palm Handle MIS, Ratchet (42-693) and ALL T-Handle MIS, Ratchet (42-694)**
  - Moving parts/joints – maintenance using surgical instrument oil!
  - Check ratchet function left and right, functional inspection of the large AO coupling, e.g. with cannulated tap MIS (42-622)

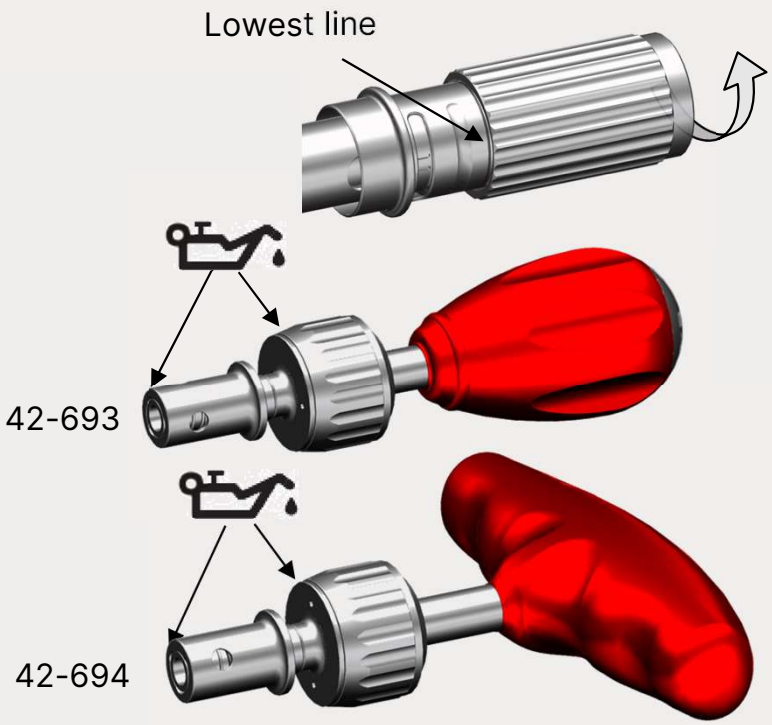

Functional Inspection

- **ALL Cannulated Taps MIS (42-612, 42-622, 42-632, 42-642)**
  - Is the tip deformed?
  - For 42-612: check with K-wire, blunt tip Ø 1.1 (H293), while handle is attached, whether cannulation is free
  - For 42-622, 42-632, 42-642: check with K-wire, threaded Ø 1.6 (H289), while handle is attached, whether cannulation is free
  - Is the thread still sharp-edged?
  - Functional inspection of the large AO coupling with palm handle or T-handle (42-693 or 42-694)

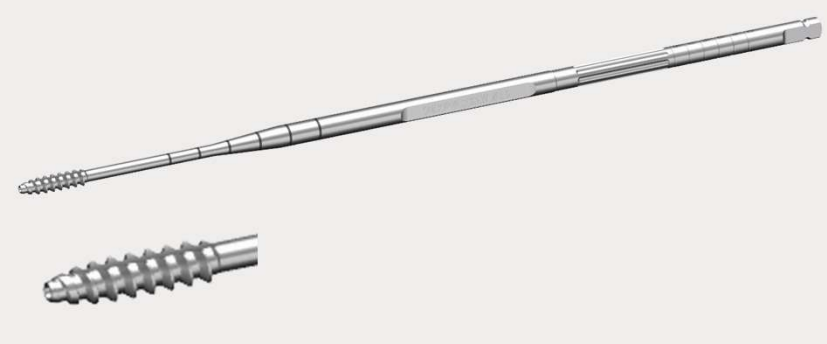

- **Safety Sleeve (42-658)**
  - ALL safety sleeves can be slid over the tubes (42-653) with low friction

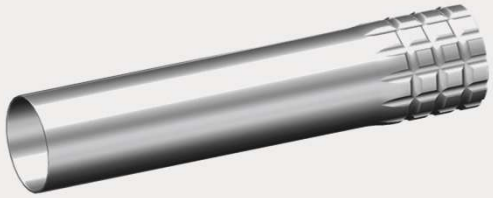

- **Tube (42-653)**
  - ALL tubes can be placed on the tulip of a screw Ø 5.5 × 45 mm (H286)
  - ALL tubes work with the counter torque wrench MIS (42-795) in all 4 positions (rotated by 90°)
  - For removing, use the tube remover, simple (42-657)

Functional Inspection

- **Tube Remover, Simple (42-657)**
  - The tube can be removed from the tulip of a screw Ø 5.5 × 45 mm (H286) with the tube remover and the transversely mounted screwdriver, hex, 4 mm (42-719); all 4 positions (rotated 90°)

- **ALL Pedicle Screwdrivers MIS (42-692)**
  - Check with K-wire, threaded Ø 1.6 (H289) whether cannulation is free
  - Torx shaft can be slid into screwdriver and is secured against falling out by the spring straps
  - Functional inspection of the large AO coupling with palm handle or T-handle (42-693 or 42-694)
  - The screw Ø 5.5 × 45 mm (H286) can be mounted (rigidly and) straight

- **ALL Nut Screw Inserters MIS with Rod Indicator (42-655)**
  - Hex is still intact (no significant signs of wear)
  - Check whether the nut screw (H287) can be picked up neatly and whether it is self-holding (shake test)

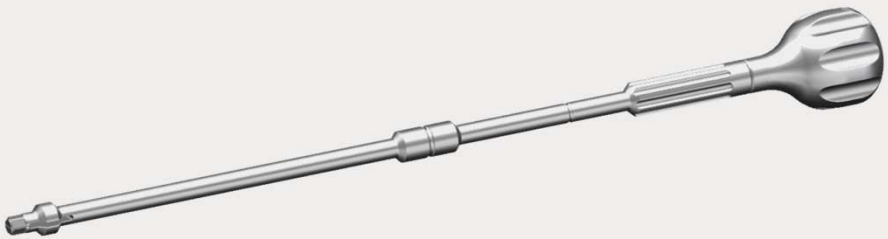

Functional Inspection

- **Torque Wrench, Hudson Coupling, 12 Nm (42-702)**
  - Movable parts/joints – maintenance using surgical instrument oil!
  - Functional inspection of the Hudson coupling with the nut screw final driver MIS (42-665)
  - Check the torque with the Sauter DB 20-3 testing device in accordance with instruction D00-005-910

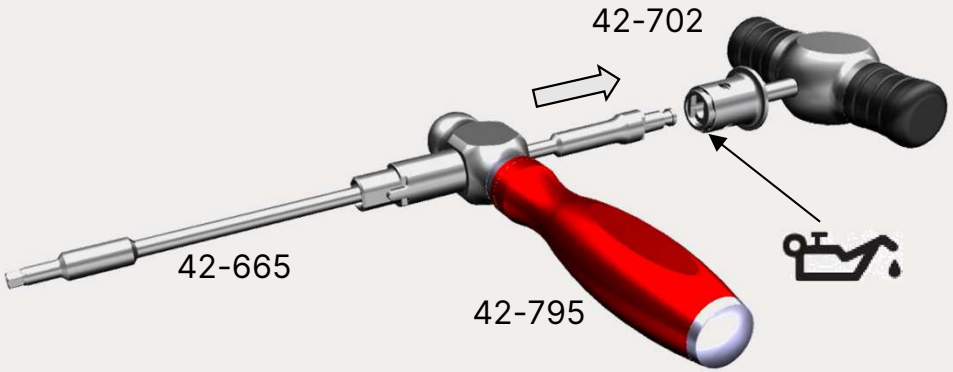

- **Nut Screw Final Driver MIS (42-665)**
  - Hex is still intact (no significant signs of wear)
  - Can be inserted into counter torque wrench (42-795) MIS

- **Counter Torque Wrench MIS (42-795)**
  - It must be possible to place the counter torque wrench on more than one tube (42-653) in all 4 positions (rotated by 90°)

Functional Inspection

- **K-Wire Dispenser, Long, for K-Wires Ø 1.6 × 472 mm and Ø 1.1 × 472 mm (42-880), and K-Wire Dispenser, Extra Long, for K-wires Ø 1.6 × 600 mm and Ø 1.1 × 600 mm (42-881, Optional)**
  - Make sure the K-wires are dry (take them out first)
  - Lid can be dismantled/mounted
  - Count number, refill if necessary (total 20 pieces; 10 pieces of Ø 1.6 mm and Ø 1.1 mm each)

42-880

42-881

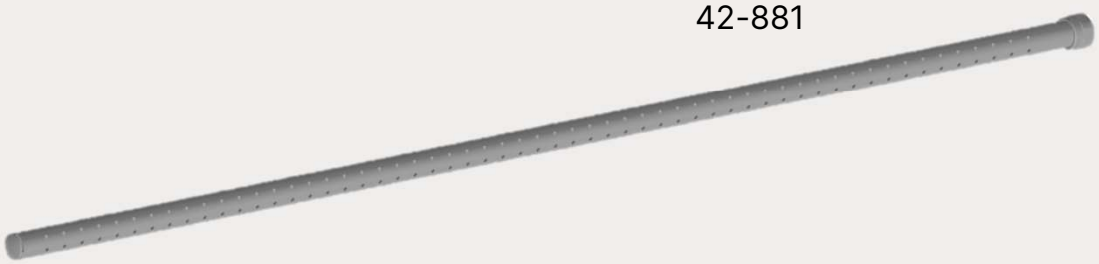

Functional Inspection

- **K-Wires, Ø 1.6 × 472 mm (42-544), Ø 1.1 × 472 mm (42-541)**
  - All K-wires are not visually bent

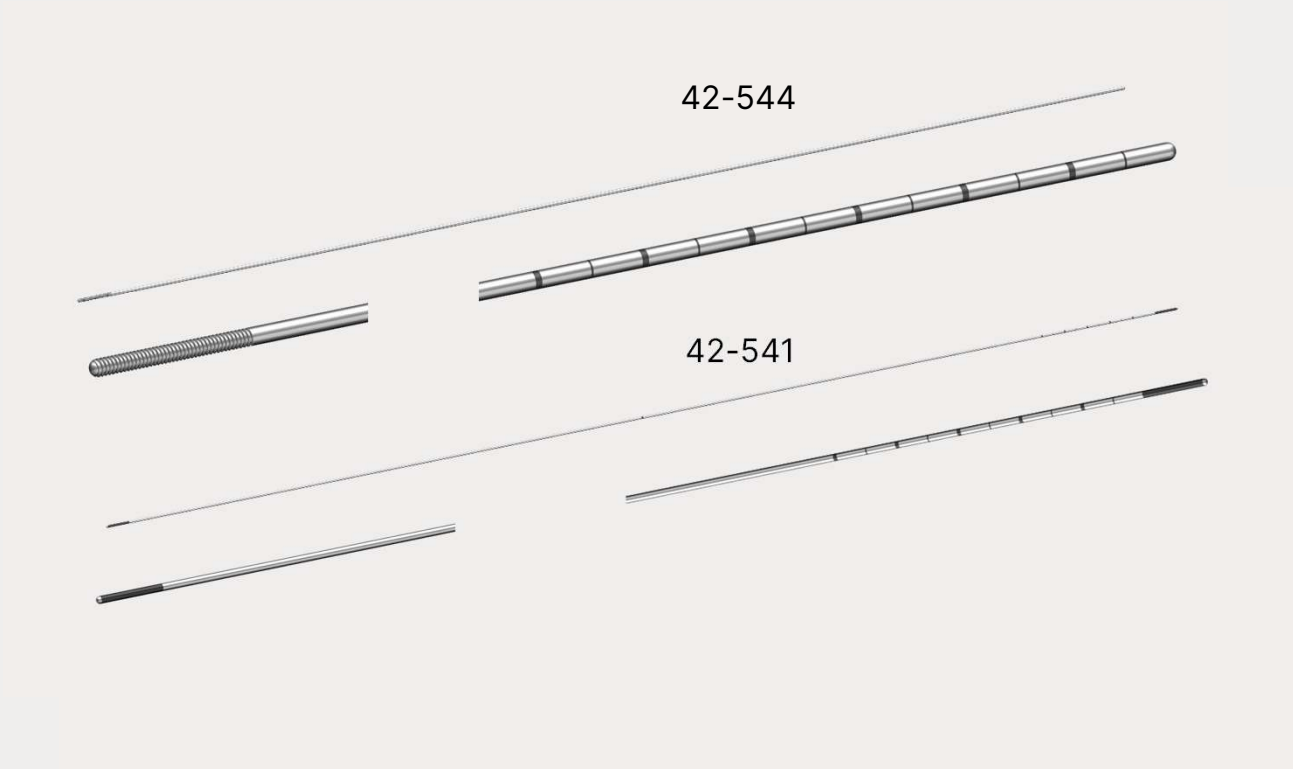

Functional Inspection

- **K-Wires, Optional, Nitinol, Ø 1.6 × 472 mm (42-546), Ø 1.6 × 600 mm, (42-546-1), Ø 1.1 × 472 mm (42-542), Ø 1.1 × 600 mm (42-542-1)**
  - All K-wires are not visually bent

Functional Inspection

- **Distractor/Compressor MIS (42-772)**
  - Moving parts/joints – maintenance using surgical instrument oil!
  - The small slider can be moved while the push button is pressed
  - By tightening the hand levers, the guidance sleeves are fixed and can no longer be turned
  - The shift lever can be set to COMP or DISTR
  - The large slider can be moved by means of the gear screw with palm handle (42-693) and screwdriver (42-719): clockwise for COMP, counterclockwise for DISTR
  - The guidance sleeves can be slid over the tubes (42-653) with the safety sleeves (42-658) on

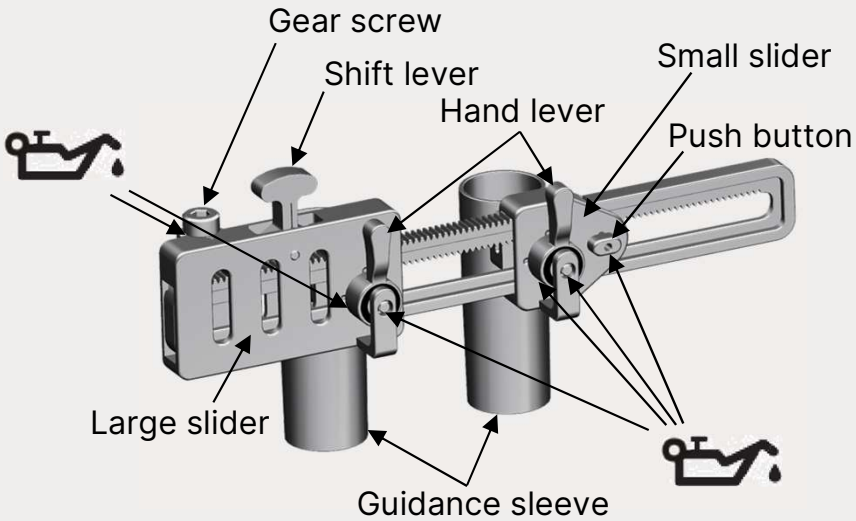

- **Screwdriver, Hex, 4 mm (42-719)**
  - Hex is still intact (no significant signs of wear) and fits into fixation screw

Functional Inspection

- **French Rod Bender (42-735)**
  - Movable parts/joints – maintenance using surgical instrument oil!
  - Handles can be moved
  - “Sid’s nose” locks in all 3 positions

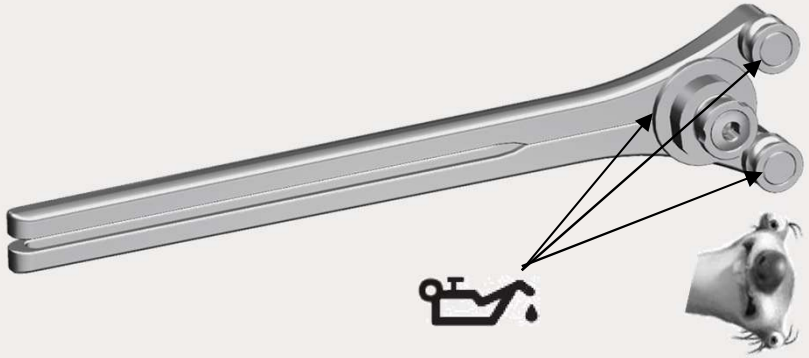

- **Rod Inserter, Direct (42-717)**
  - The rod curved Ø 6.0 (H288) can be inserted into rod inserter and secured with fixation screw (42-717-1) by using the screwdriver (42-719)
  - Check whether hex of the fixation screw (42-717-1) is intact

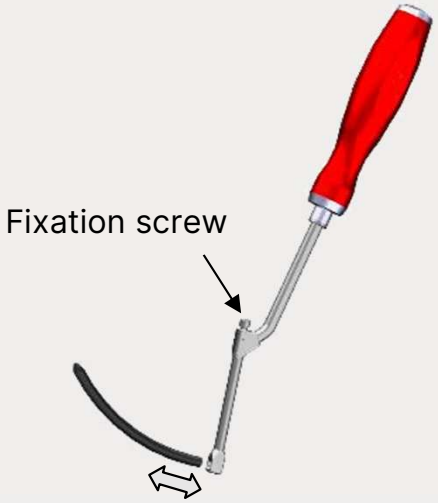

Functional Inspection

- **Tulip Finder (42-695)**
  - Check with K-wire, threaded Ø 1.6 (H289) whether cannulation is free
  - Can be screwed into tulip of a screw Ø 5.5 × 45 mm (H286)

- **Tulip Finder Sleeve (42-696)**
  - Can be slid over tulip finder

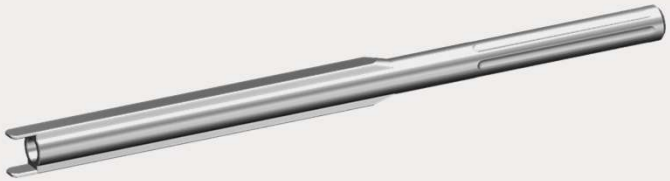

- **Nut Screw Finder for Revision (42-697)**
  - Check with K-wire, threaded Ø 1.6 (H289) whether cannulation is free
  - Hex is still intact (no significant signs of wear) and fits into nut screw (H287)

- **Rod Length Caliper (42-715)**
  - Resistance can be felt when moving the indicator
  - Can be disassembled/assembled

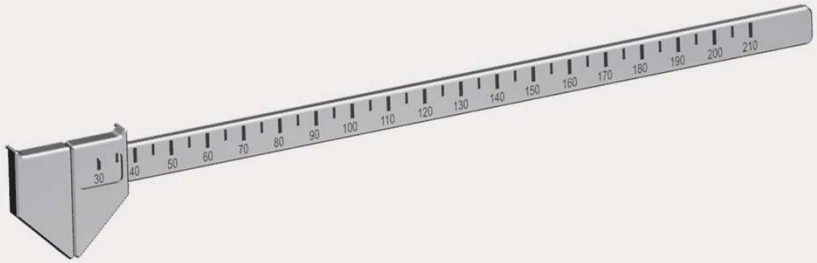

Functional Inspection

- **Rod Length Forceps (42-716)**
  - Moving parts/joints – maintenance using surgical instrument oil!
  - Functional between 40 and 160 mm
  - Check with stencil (print 100%) or with caliper that forceps is not bent

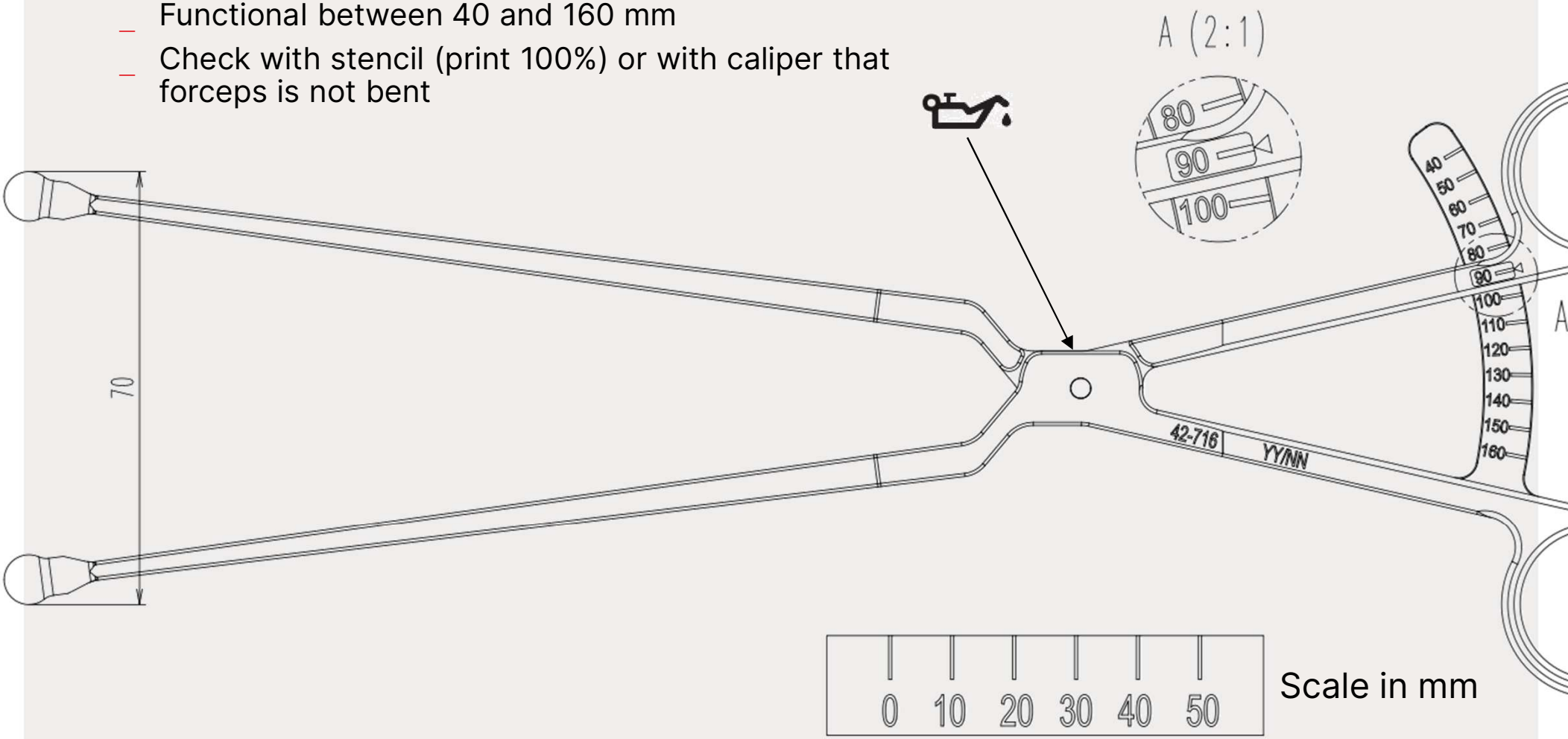

Scale in mm

0248US.2025-06